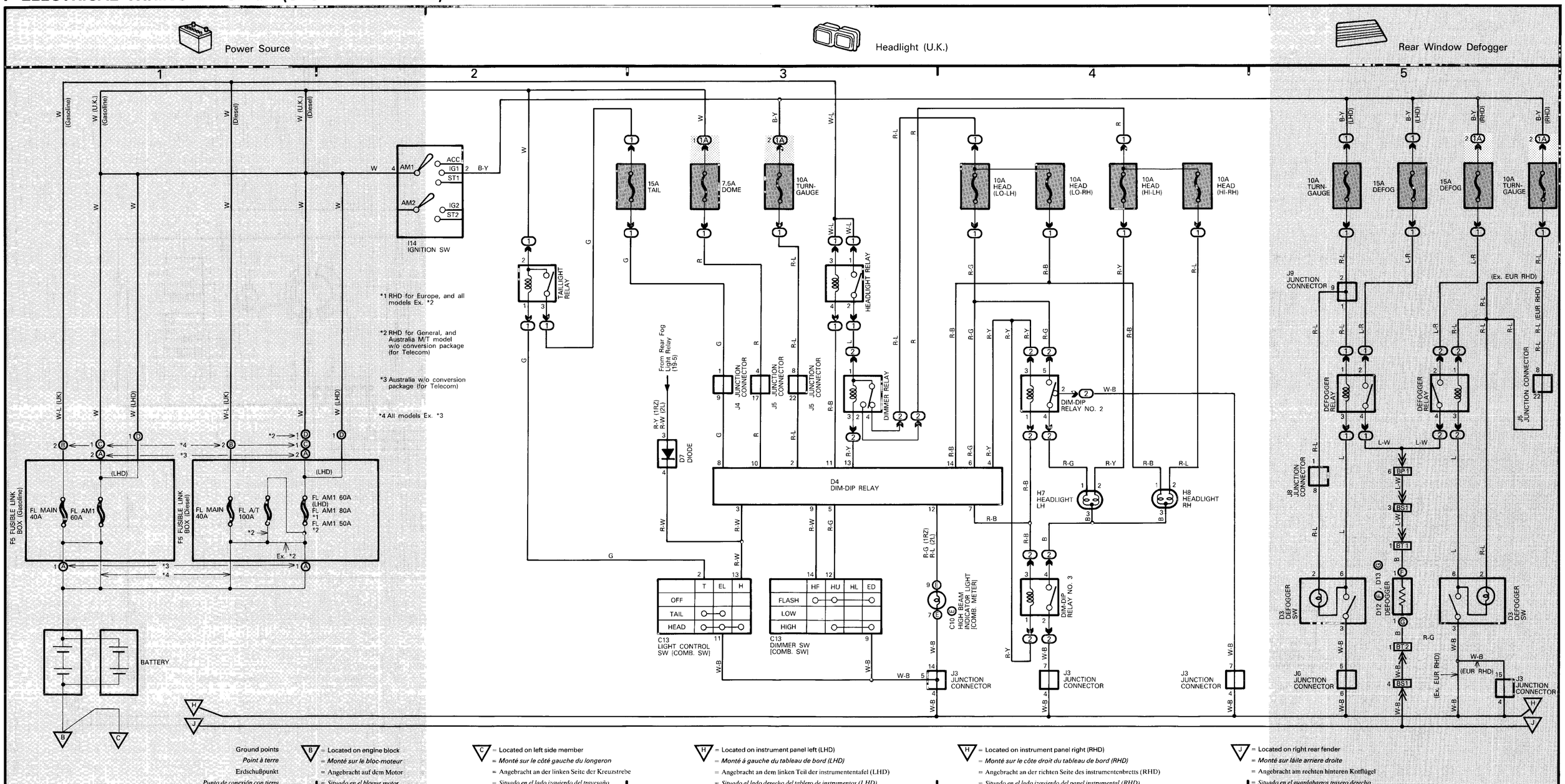
Power Source
Headlight (U.K.)
Rear Window Defogger
1
2
3
4
5
I14 IGNITION SW
ACC
IG1
ST1
AM1
AM2
IG2
ST2
*1 RHD for Europe, and all models Ex. *2
*2 RHD for General, and Australia M/T model w/o conversion package (for Telecom)
*3 Australia w/o conversion package (for Telecom)
*4 All models Ex. *3
F5 FUSIBLE LINK BOX (Gasoline)
F5 FUSIBLE LINK BOX (Diesel)
FL MAIN 40A
FL AM1 60A
FL A/T 100A
FL AM1 60A (LHD)
FL AM1 80A *1
FL AM1 50A *2
BATTERY
15A TAIL
7.5A DOME
10A TURN-GAUGE
10A HEAD (LO-LH)
10A HEAD (LO-RH)
10A HEAD (HI-LH)
10A HEAD (HI-RH)
15A DEFOG
TAILLIGHT RELAY
HEADLIGHT RELAY
DIMMER RELAY
From Rear Fog Light Relay (19S)
D7 DIODE
J4 JUNCTION CONNECTOR
J5 JUNCTION CONNECTOR
D4 DIM-DIP RELAY
DIM-DIP RELAY NO. 2
DIM-DIP RELAY NO. 3
H7 HEADLIGHT LH
H8 HEADLIGHT RH
C10 HIGH BEAM INDICATOR LIGHT [COMB. METER]
C13 LIGHT CONTROL SW [COMB. SW]
C13 DIMMER SW [COMB. SW]
J3 JUNCTION CONNECTOR
J9 JUNCTION CONNECTOR
J8 JUNCTION CONNECTOR
J6 JUNCTION CONNECTOR
DEFOGGER RELAY
D3 DEFOGGER SW
D12 DEFOGGER
D13 DEFOGGER
(Ex. EUR RHD)
(EUR RHD)
Ground points
Point à terre
Erdschußpunkt
Punto de conexión con tierra
B = Located on engine block
= Monté sur le bloc-moteur
= Angebracht auf dem Motor
= Situado en el bloque motor
C = Located on left side member
= Monté sur le côté gauche du longeron
= Angebracht an der linken Seite der Kreuzstrebe
= Situado en el lado izquierdo del travesaño
H = Located on instrument panel left (LHD)
= Monté à gauche du tableau de bord (LHD)
= Angebracht an dem linken Teil der instrumententafel (LHD)
= Situado al lado derecho del tablero de instrumentos (LHD)
H = Located on instrument panel right (RHD)
= Monté sur le côte droit du tableau de bord (RHD)
= Angebracht an der richten Seite des instrumentenbretts (RHD)
= Situado en el lado izquierdo del panel instrumental (RHD)
J = Located on right rear fender
= Monté sur láile arrière droite
= Angebracht am rechten hinteren Kotflügel
= Situado en el guardabarros trasero derecho